7035190 INDUSTRIAL MOUNT,
UNIVERSAL ADAPTER MOUNT WITH
BACK PLATE / SHADE SHIELDS

ASSEMBLY INSTRUCTIONS

SUPPLIED COMPONENTS:

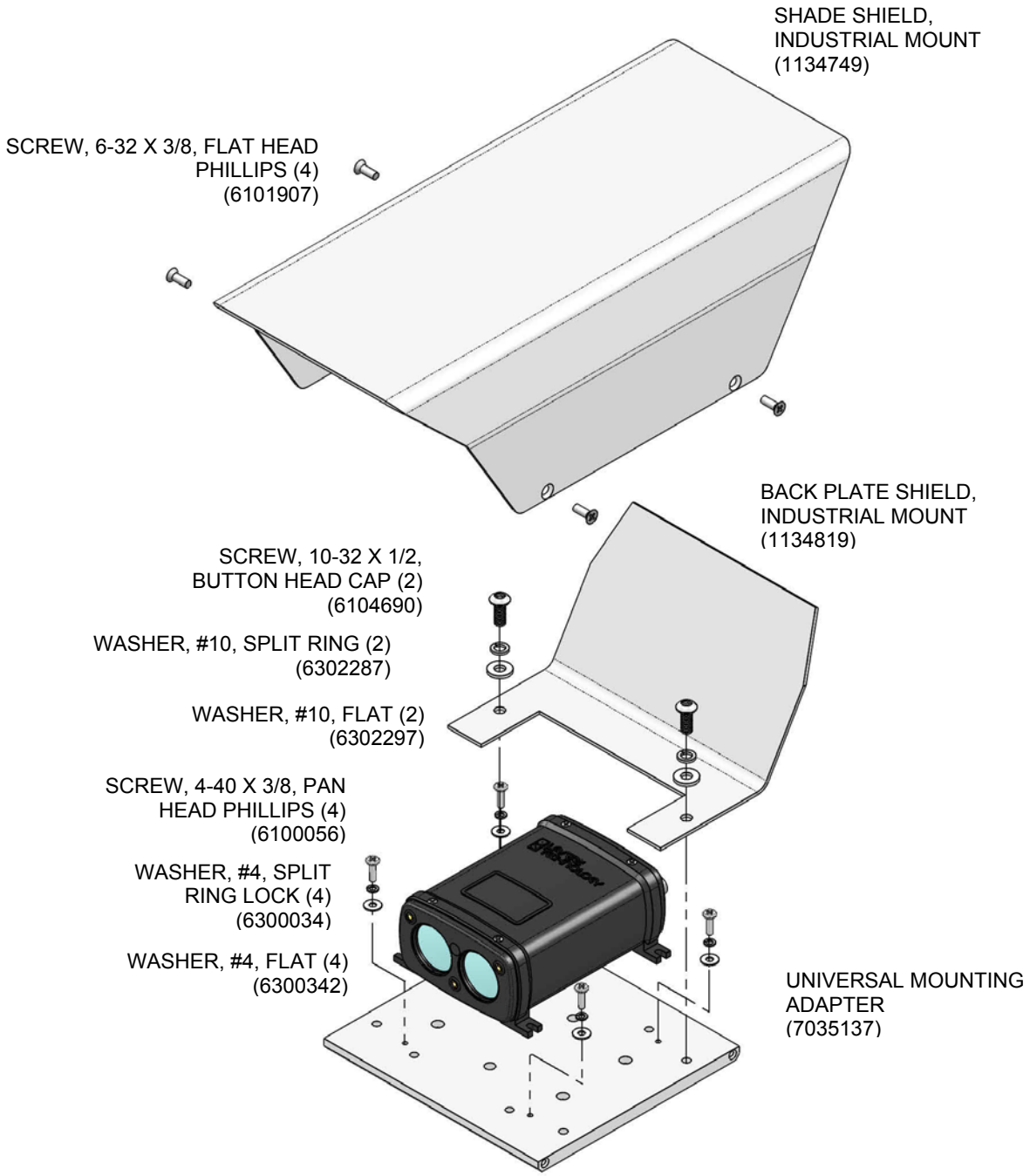

6912 S. Quentin St. Centennial, CO 80112 USA / Phone: 1 (303) 649-1000 / Fax: 1 (303) 649-9710 / www.lasertech.com

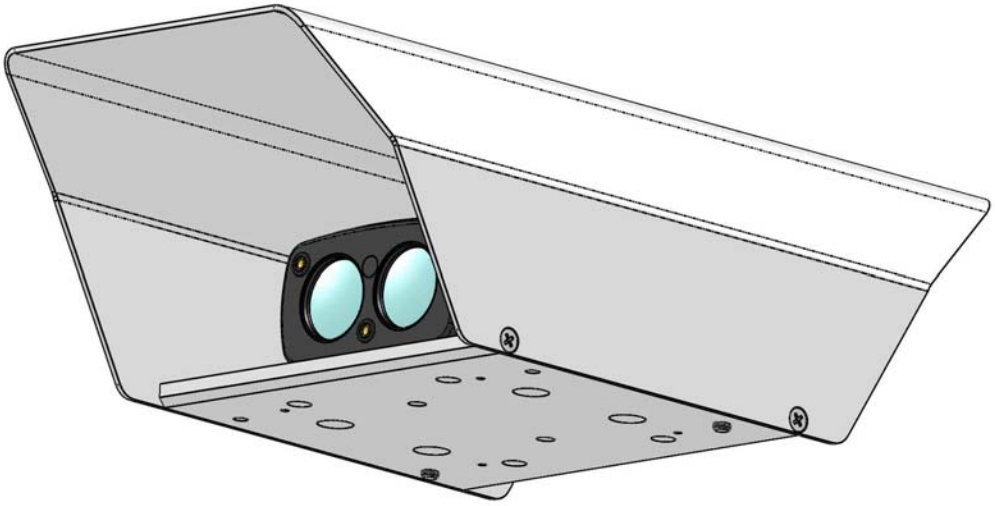

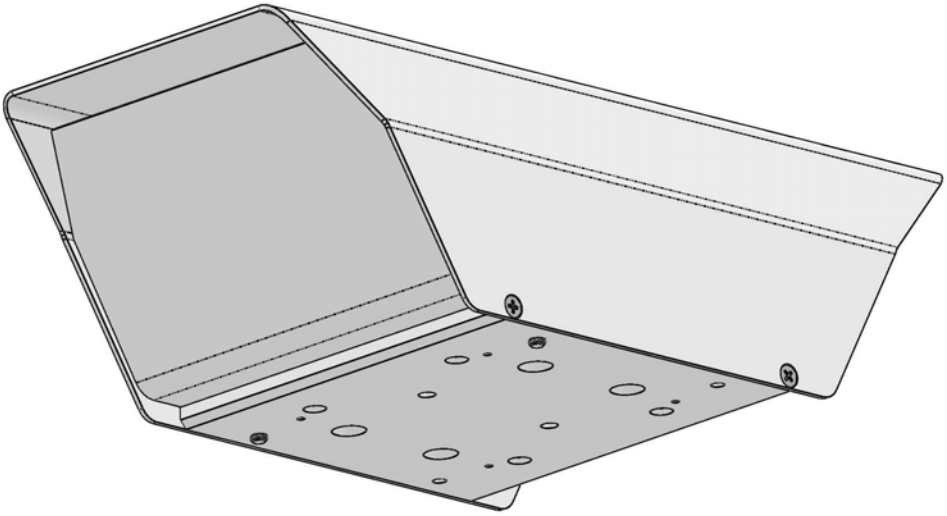

6912 S. Quentin St. Centennial, CO 80112 USA / Phone: 1 (303) 649-1000 / Fax: 1 (303) 649-9710 / www.lasertech.com